SHIMANO

STELLA S A-RB

STL-SW4000HG

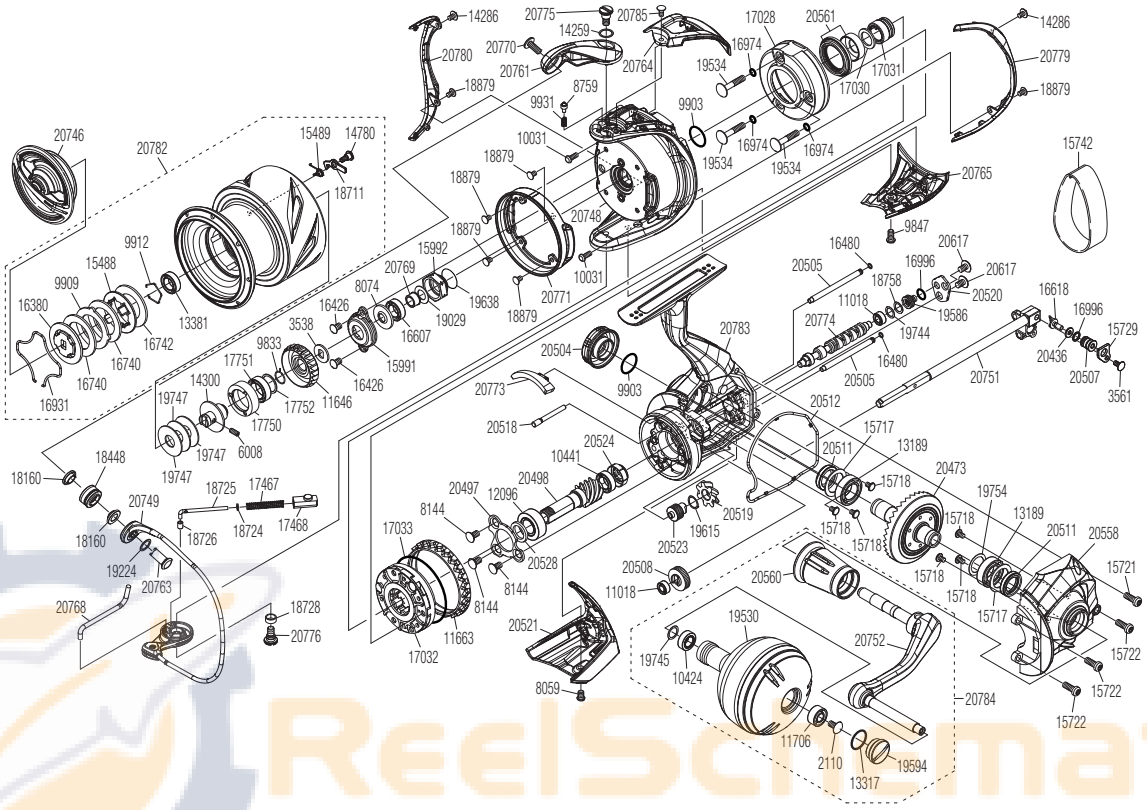

Please note that the number of adjusting washers may not always be the same as shown in the exploded views.

(51SF24H042X) Please note that your actions take full responsibility when you take it apart.

Part No.	Description	Part No.	Description	Part No.	Description
RD 2110	Screw	RD17028	Clutch Water Proof Cover	RD20558	Side Cover Assembly
RD 3538	Spool Support A	RD17030	Washer	RD20560	Handle Shaft Cover Assembly
RD 3561	Screw	RD17031	Roller Clutch Inner	RD20561	Roller Clutch Waterproof Assembly
RD 6008	Set Screw	RD17032	Roller Clutch Assembly	RD20617	Screw
RD 8059	Screw	RD17033	Clutch Cover Water Proof	RD20746	Drag Knob Assembly
RD 8074	Bearing Water Proof	RD17467	Bail Spring	RD20748	Rotor Assembly
RD 8144	Screw	RD17468	Bail Spring Guide B	RD20749	Bail Assembly
RD 8759	Click Pin	RD17750	Bearing Housing	RD20751	Main Shaft Assembly
RD 9833	Ratchet Spring	RD17751	Ball Bearing	RD20752	Handle Shank Assembly
RD 9847	Screw	RD17752	Washer	RD20761	Bail Arm
RD 9903	O Ring	RD18160	Collar	RD20763	Line Roller Support
RD 9909	Eared Washer	RD18448	Line Roller Set	RD20764	Bail Spring Cover
RD 9912	Bearing Retainer	RD18711	Drag Click Screw	RD20765	Bail Hold Support Guard
RD 9931	Click Spring	RD18724	Spring Guide A Support Collar	RD20768	Bail Trip Lever
RD10031	Screw	RD18725	Bail Spring Guide A	RD20769	Spacer
RD10424	Ball Bearing	RD18726	Spring Guide A Support Collar B	RD20770	Screw
RD10441	Ball Bearing	RD18728	Collar	RD20771	Rotor Brim
RD11018	Ball Bearing	RD18758	Washer	RD20773	Bail Trip Strike
RD11646	Drag Click Ratchet	RD18879	Screw	RD20774	Worm Shaft
RD11663	Friction Ring	RD19029	Washer	RD20775	Screw
RD11706	Ball Bearing	RD19224	Washer	RD20776	Screw
RD12096	Ball Bearing	RD19530	Handle Knob Assembly	RD20779	Rotor Guard A
RD13189	Ball Bearing	RD19534	Screw	RD20780	Rotor Guard B
RD13317	O Ring	RD19586	Bushing	RD20782	Spool Assembly
RD13381	Ball Bearing	RD19594	Handle Knob Seal	RD20783	Body Assembly
RD14259	Washer	RD19615	Washer	RD20784	Handle Assembly
RD14286	Screw	RD19638	Nut Water Proof	RD20785	Screw
RD14300	Bearing Bushing	RD19744	Washer		
RD14780	Screw	RD19745	Washer		
RD15488	Key Washer A	RD19747	Spool Washer A		
RD15489	Drag Click Spring	RD19754	Washer		
RD15717	Washer	RD20436	Washer		
RD15718	Screw	RD20473	Drive Gear Assembly		
RD15721	Screw	RD20497	Bearing Retainer		
RD15722	Screw	RD20498	Pinion Gear		
RD15729	Oscillating Pawl Cover	RD20504	Handle Screw Cap		
RD15991	Retainer	RD20505	Oscillating Guide		
RD15992	Rotor Nut	RD20507	Collar		
RD16380	Key Washer B	RD20508	Idle Gear		
RD16426	Screw	RD20511	Bearing Water Proof		
RD16480	O Ring	RD20512	Body Seal		
RD16607	Ball Bearing	RD20518	Idle Gear Shaft		
RD16618	Oscillating Pawl	RD20519	Idle Gear (Large)		
RD16740	Drag Washer A	RD20520	Worm Shaft Retainer		
RD16742	Drag Washer B	RD20521	Rear Protector		
RD16931	Retainer	RD20523	Idle Gear (Small)		
RD16974	O Ring	RD20524	Bushing		
RD16996	O Ring	RD20528	Washer	RD15742	Belt (S) (accessory)